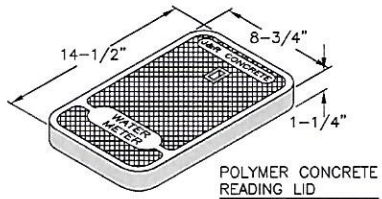

POLYMER CONCRETE READING LID

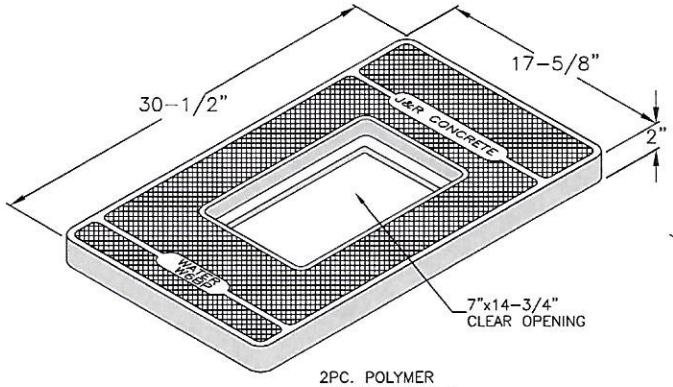

2PC. POLYMER CONCRETE COVER

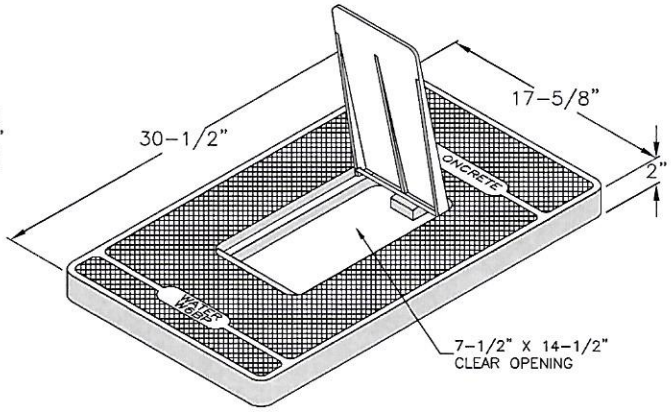

POLYMER CONCRETE COVER WITH POLYMER HINGED LID

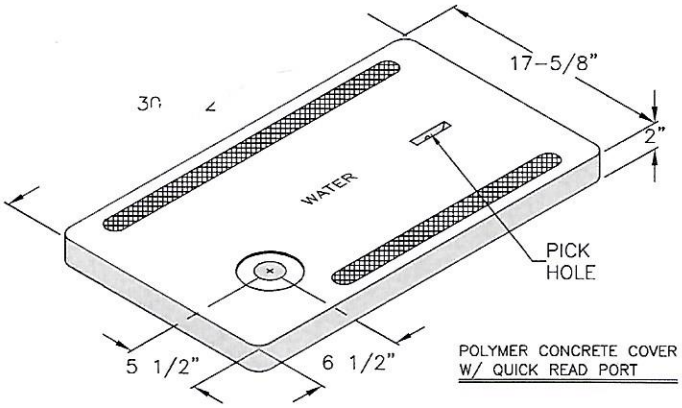

POLYMER CONCRETE COVER W/ QUICK READ PORT

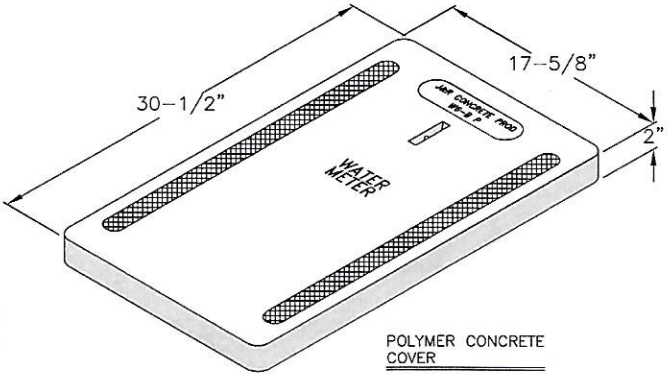

POLYMER CONCRETE COVER

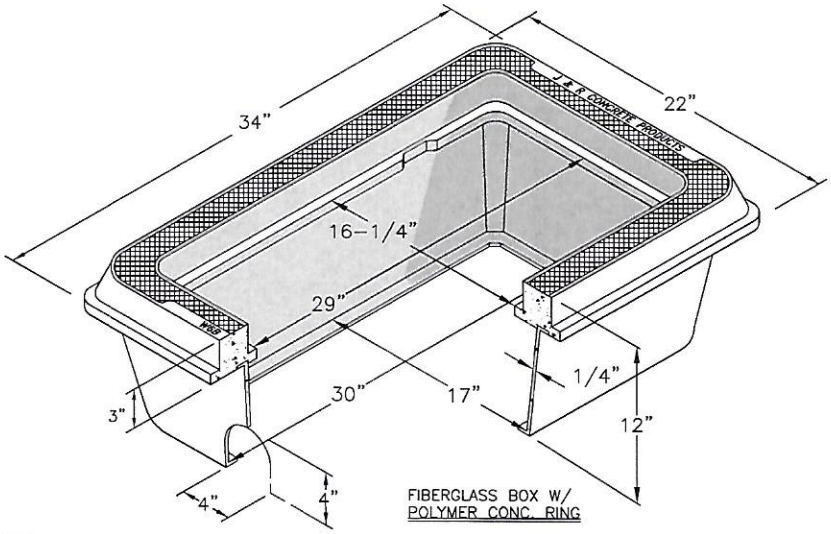

FIBERGLASS BOX W/ POLYMER CONC. RING

P-W6B SERIES POLYMER CONCRETE METER BOX

J&R CONCRETE PRODUCTS

440 W. MARKHAM ST.
PERRIS, CA. 92571
PHONE:(951) 943-5855 FAX:(951) 940-9207