TYPICAL 6” BOTTOM BLOWOFF

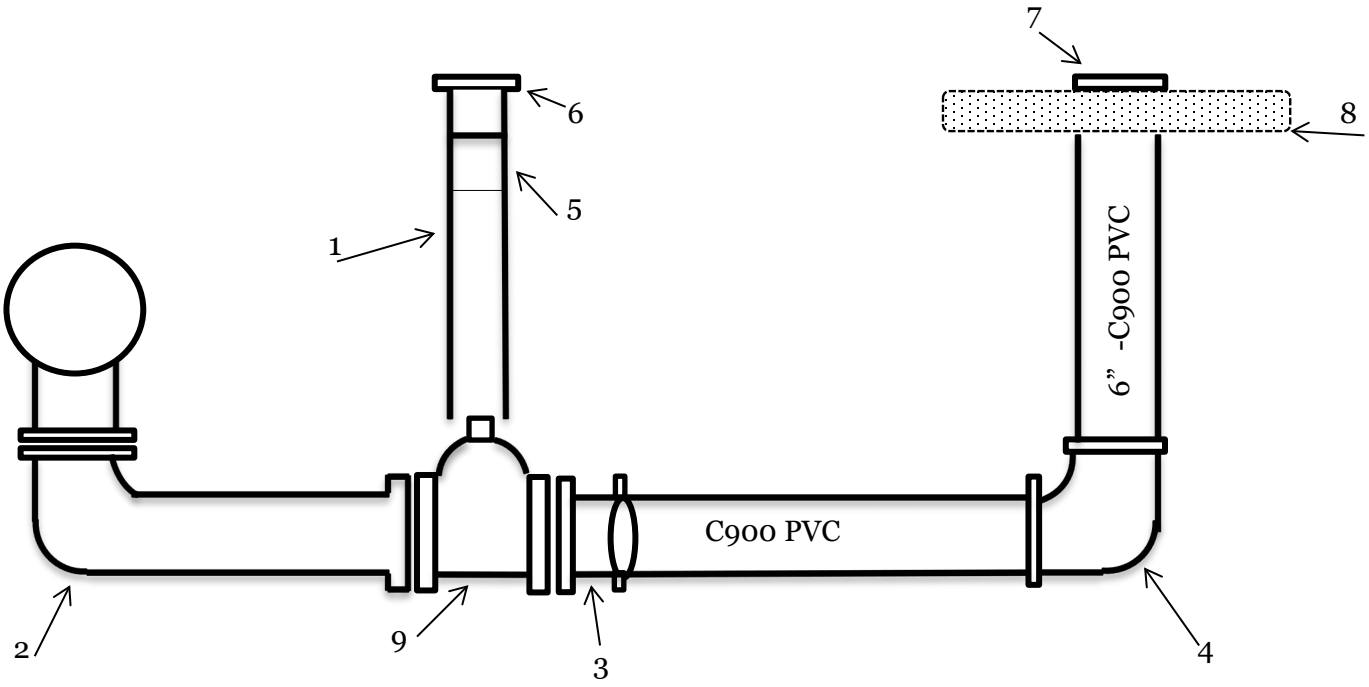

1. 8”SDR 30-AT LEAST RISER
2. FLANGED 90
3. ADAPTOR TO PVC
4. PUSH ON 90
5. 8”x 12” GALV SLEEVE
6. 8” CAST IRON VALVE COVER MARKED WATER
7. 6” VALVE COVER
8. 4 X 4 CONCRETE PAD
9. 6” RW GATE VALVE