D-23449 Rev. A
8/22/18

CLOW

Valve Company

902 South 2nd St. Oskaloosa, IA 52577 1-800-829-2569 info@clowvalve.com

LP 619 Low Profile Break Off Check Valve

Option	Number of Holes	Hole Size	Diameter of ℄
8 Hole	8	7/8"	9 1/2"
6 Hole	6	3/4"	9 3/8"
6 Hole SD	6	7/8"	9 1/2"

*The option of a 6 Hole (top/hydrant) x 8 Hole (bottom/pipe) is available upon request

Item No.	Description	Material	Qty.
1	1/2"-13 Lock Nut	18-8 Stainless Steel	2
2	3-Ribbed Gasket	Rubber	1
3	Retaining Plate	304 Stainless Steel	1
4	Retaining Rod	304 Stainless Steel	2
5	O-Ring #364	Buna-N	1
6	Body	Ductile Iron	1
7	1/4" NPT Pipe Plug	18-8 Stainless Steel	4
8	Large Washer	C11000	2
9	Flapper	C87850	2
10	Small Washer	C11000	2
11	Cross Bar	304 Stainless Steel	2
12	Safety Flange	Gray Iron	2

Notes:

- Designed for system pressures up to 350 psi
- ∅1/4" weep hole in each flapper
- Epoxy interior coating, AWWA C550 compliant
- NSF61/Annex G and ANSI 372 approved
- Designed for all C503 wet barrel fire hydrants

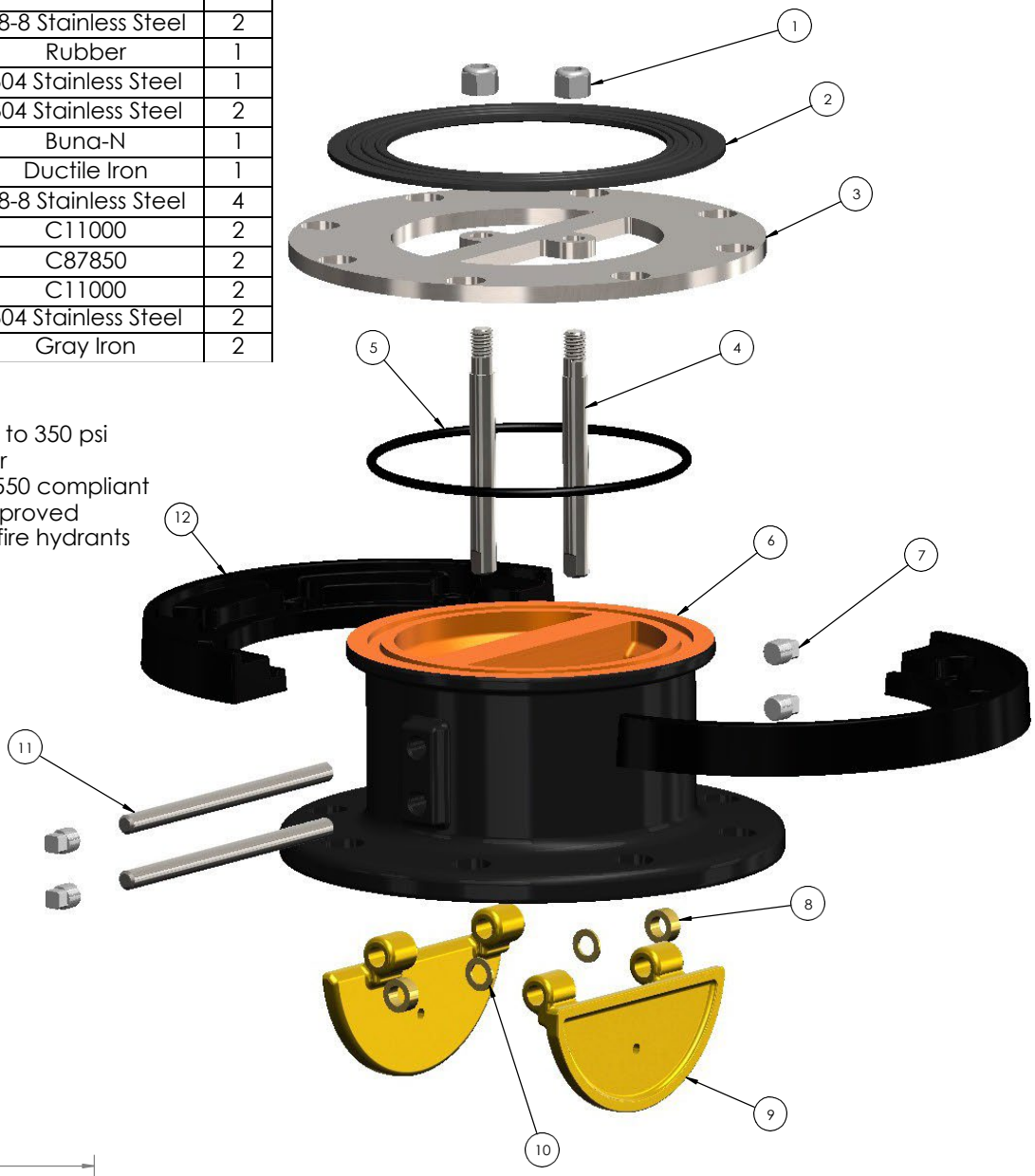

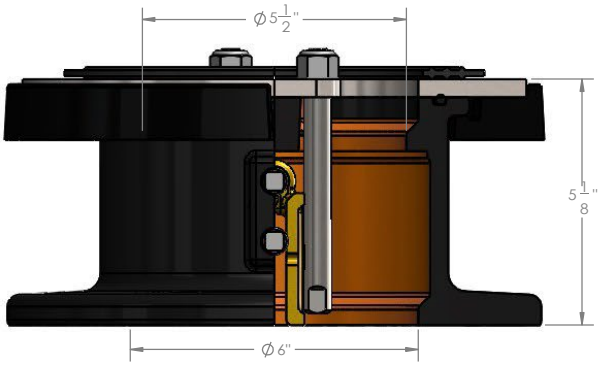

Open

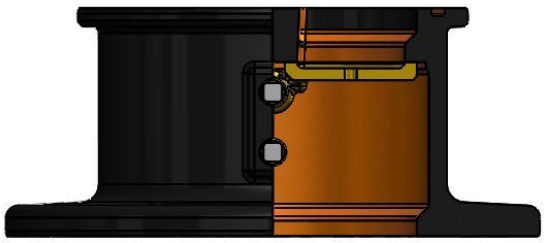

Deployed