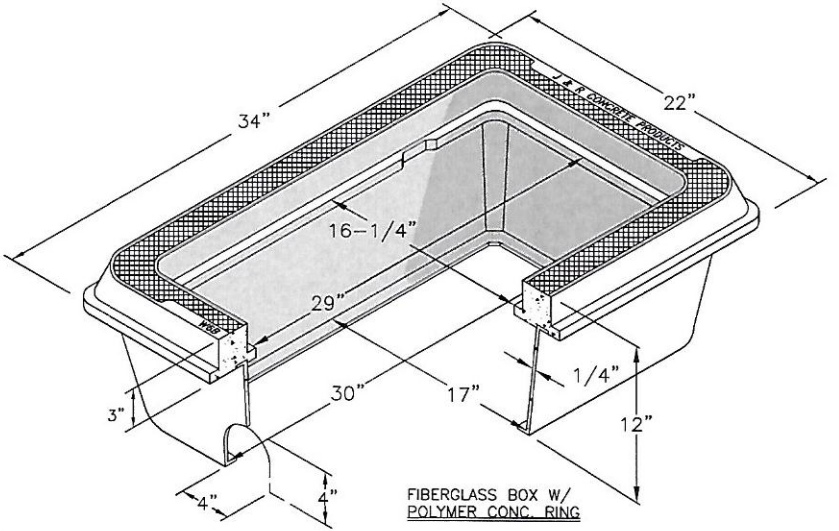

P-W6B SERIES POLYMER CONCRETE METER BOX

J&R CONCRETE PRODUCTS

440 W. MARKHAM ST.
PERRIS, CA. 92571
PHONE:(951) 943-5855 FAX:(951) 940-9207